A Systematic Teaching Method for Modeling, Simulation and Control of Quadrotor Uncrewed Aerial Vehicles

Dr. Oguzhan Oruc, The Citadel

Dr. Oguzhan Oruc received his B.S. and M.S. degrees in mechanical engineering from Istanbul Technical University, Istanbul, Turkey in 2005 and 2017, respectively, and the Ph.D. degree in mechanical engineering from the University of New Hampshire, in 2018. He is currently an Assistant Professor in the Department of Mechanical Engineering, The Citadel Military College of South Carolina. His research interests include nonlinear system identification, modeling, simulation, and control system design for underwater and surface vehicles, machine learning-based adaptive control, AIenabled haptic devices in biomechanics. Dr. Oruc's specialization is System Dynamics and Control and System Identification in particular. His studies involve nonlinear system identification model-based control, and navigation and guidance of ocean vehicles.

Dr. Eva Singleton, The Citadel Military College

Dr. Eva Singleton is an Assistant Professor in the Department of Engineering Leadership and Program Management (ELPM) in the School of Engineering at The Citadel Military College in Charleston, SC. She is a certified Project Management Professional with experience in various industries, including publishing, manufacturing, and government contracting. She enjoys serving in complex project management roles requiring adaptability, problem-solving, strategic planning, and leadership skills. Dr. Singleton is enthusiastic about educating professionals and students to advance their business and academic endeavors using project management competencies, skills, tools, techniques, and leadership. Her research interest includes interdisciplinary topics related to project management, such as leadership, entrepreneurship, artificial intelligence, systems planning, process improvement, and burnout. Dr. Singleton obtained a Doctorate in Business Administration from Walden University, a Master of Science in Project Management from The Citadel, certificates in Organizational Leadership and Technical Project Management, and a Bachelor of Science in Business Administration from Strayer University.

Dr. Andrew B. Williams, The Citadel

Andrew B. Williams, Ph.D. is the Dean of Engineering and the Louis S. LeTellier Chair at The Citadel School of Engineering. Dr. Williams is an alumni of the National Academy of Engineering Frontiers in Engineering Symposium and the National GEM Consortium Ph.D. in Engineering Program. He received both his Ph.D. in Electrical Engineering with an emphasis in AI and his BSEE from the University of Kansas.

Dr. Kevin Skenes, The Citadel

Kevin Skenes is an associate professor at The Citadel. His research interests include non-destructive evaluation, photoelasticity, manufacturing processes, and engineering education.

©American Society for Engineering Education, 2025

A Systematic Teaching Method for Modeling, Simulation and Control of Quadrotor Uncrewed Aerial Vehicles (UAVs)

Introduction

Recent advancements in microelectronics, machine perception, and computational technologies have enabled the use of Uncrewed Aerial Vehicles (UAVs) rapidly and extensively in industrial, scientific, and military areas with various purposes such as surveillance and security, monitoring and inspection of urban infrastructure, transportation of commercial goods, law enforcement, surveying and mapping of large areas, disaster response, crop and soil sampling.

Due to its interdisciplinary nature, high interest from commercial, scientific, and military investors, and expanding application areas, UAV research, development, and manufacturing attract scientists and engineers from almost all disciplines. Furthermore, as artificial intelligence (AI) revolutionizes various engineering areas such as aviation [1], robotics and automation [2],[3] and healthcare [4],[5] UAV research will also be revolutionized and will attract even more future engineers.

Considering that preparing future engineers for the jobs of tomorrow is one of the most important responsibilities of engineering educators [6],[7] including UAV modeling simulation and control design study in mechanical engineering curricula is important.

In this study, the authors proposed a systematic teaching method of the fundamentals of UAVs such as mathematical modeling, control design, and the numerical simulation of UAV control systems for a newly designed undergraduate elective course (Advanced Topics in Engineering-400 level) module which is offered in the Mechanical Engineering of a public university.

The first step of this method is to obtain a mathematical model of a small-scale quadcopter. A quadcopter is a four-rotor UAV placed on a rigid body in square formation to control the vehicle's motion in all degrees of freedom (DOF). Obtaining the mathematical model of the quadcopter requires examining translational kinematics, rotational kinematics, translational dynamics, and rotational dynamics to form the equations of motion (EOM). To obtain the necessary forces and moments, thrust configuration determination and obtaining the motor dynamics are other parts of the modeling step.

The second step of the proposed method is to design the fundamental controls for the quadcopter. For a stable flight, a nested control loop which consists of three individual loops is proposed. The individual loops are the translational position controller, orientation and altitude controller, and rotational velocity controller.

The third step is to numerically simulate the obtained model and control system. Numerical simulation software is used for simulations.

The unique contributions of this study to engineering education are;

- Enabling the students to use their mathematical control theory background gained in 350 and 351 courses in real-life scenarios such as UAV control problems.
- Developing a systematic control design method for UAVs, quadrotors in particular.
- Supporting undergraduate research with mathematical control theory in UAV research, design, and application.

Quadcopter Mathematical Model

In Fig. 1 a quadcopter structure with its four motors numbered from 1 to 4 counter-clockwise direction and reference coordinate frames used for modeling are shown. The central assumptions to obtain a mathematical model for the quadcopter are as follows.

Assumption 1. *The body of the vehicle is rigid. It has 3 planes of symmetry. Center of gravity and center of geometry are at the same point.*

Assumption 2. *Propeller blades are rigid and deformation due to high velocity is negligible.*

Assumption 3. *Aerodynamic effects of surrounding atmosphere and the ground effect are negligible.*

Assumption 4. *The center of the body reference frame $\{B\}$ where the translational and rotational velocities are defined in is attached to the center of gravity of the vehicle.*

Assumption 5. *For the quadcopter operating approximately same latitude and longitude [8], North, East, Down reference frame $\{N\}$ can be used as inertial reference frame and the position of the vehicle is defined in this reference frame.*

Assumption 6. *The quadcopter operates at low velocities, roll and pitch angles during hovering motion are negligible.*

Assumption 7. *Considering negligible roll and pitch dynamics, vehicle motion can be decoupled into vertical and horizontal plane motions representing the heave and yaw dynamics, respectively. The decoupled dynamics can then be controlled separately.*

Reference Coordinate Frames and Transformations

Kinematics and the kinetics (dynamics) of the quadcopter in space can be examined by using two reference coordinate frames. The first one is the vehicle's body reference frame $\{\mathrm{B}\}$. The second one is the inertial reference coordinate frame $\{\mathrm{N}\}$. Translational and angular velocities of the vehicle are defined in $\{\mathrm{B}\}$ while the position of the vehicle is defined in $\{\mathrm{N}\}$. Therefore, a transformation between the reference frames has to be defined. Let the position of the vehicle in $\{\mathrm{N}\}$ is $\eta = [x_N, y_E, z_D]^T$ and in $\{\mathrm{B}\}$ is $\eta_B = [x_b, y_b, z_b]^T$ and the orientation vector described by the Euler angles is $\Theta = [\phi, \theta, \psi]^T$. Then the transformation from inertial reference frame $\{\mathrm{N}\}$ to body reference frame $\{\mathrm{B}\}$ is given as it follows,

$$\eta_B = R_N^B \eta = R(\psi)R(\theta)R(\phi) \tag{1}$$

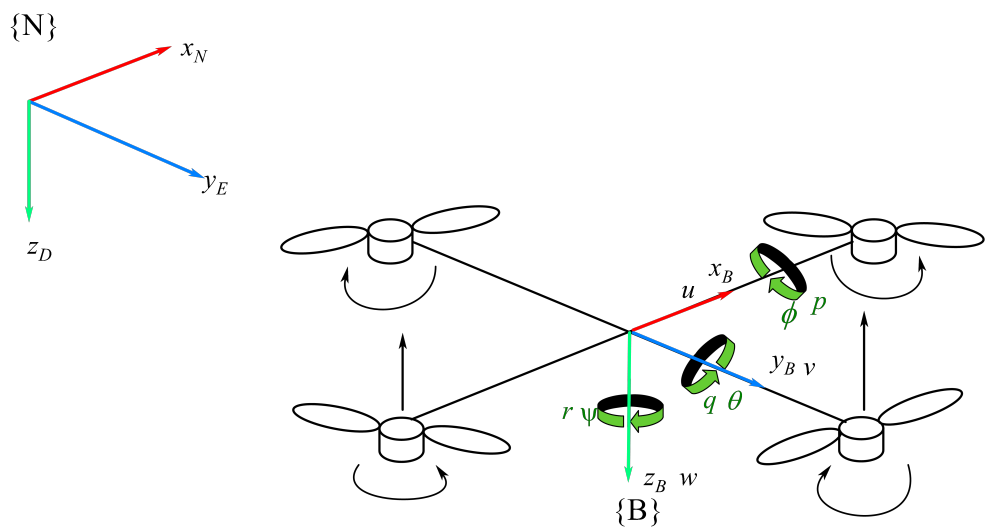

Figure 1: Quadcopter structure and reference frames.

where,

$$R(\psi) = \begin{bmatrix} cos(\psi) & sin(\psi) & 0 \\ -sin(\psi) & cos(\psi)0 & \\ 0 & 0 & 1 \end{bmatrix} R(\theta) = \begin{bmatrix} cos(\theta) & 0 & -sin(\theta) \\ 0 & 1 & 0 \\ sin(\theta) & 0 & cos(\theta) \end{bmatrix} R(\phi) = \begin{bmatrix} 1 & 0 & 0 \\ 0 & cos(\phi) & sin(\phi) \\ 0 & -sin(\phi) & cos(\phi) \end{bmatrix} \tag{2}$$

$$R_N^B = \begin{bmatrix} cos(\psi)cos(\theta) & sin(\psi)cos(\theta) & -sin(\theta) \\ cos(\psi)sin(\phi)sin(\theta) - cos(\phi)sin(\psi) & sin(\psi)sin(\theta)sin(\phi) + cos(\phi)cos\psi & cos(\theta)sin(\phi) \\ cos(\phi)cos(\psi)sin(\theta) + sin(\phi)sin(\psi) & cos(\phi)sin(\psi)sin(\theta) - cos(\psi)sin(\phi) & cos(\phi)cos(\theta) \end{bmatrix} \tag{3}$$

Similarly, transformation from body reference frame to inertial reference frame is given as it follows,

$$\eta = R_B^N \eta_B = R(\psi)^T R(\theta)^T R(\phi)^T \tag{4}$$

where,

$$R_B^N = \begin{bmatrix} cos(\psi)cos(\theta) & cos(\psi)sin(\phi)sin(\theta) - cos(\phi)sin(\psi) & cos(\phi)cos(\psi)sin(\theta) + sin(\phi)sin(\psi) \\ sin(\psi)cos(\theta) & sin(\psi)sin(\theta)sin(\phi) + cos(\phi)cos\psi & cos(\phi)sin(\psi)sin(\theta) - cos(\psi)sin(\phi) \\ -sin(\theta) & cos(\theta)sin(\phi) & cos(\phi)cos(\theta) \end{bmatrix} \tag{5}$$

Kinematics of Quadrotor
The first step of the proposed mathematical modeling of the quadcopter is to analyze the translational kinematics. Let the translational velocity vector is $V = [u, v, w]^T$. Then the time derivative of the position vector may be defined as it follows,

$$\begin{bmatrix} \dot{x}_N \\ \dot{y}_E \\ \dot{z}_D \end{bmatrix} = R_B^N V = \begin{bmatrix} c(\psi)c(\theta) & c(\psi)s(\phi)s(\theta) - c(\phi)s(\psi) & c(\phi)c(\psi)s(\theta) + s(\phi)s(\psi) \\ s(\psi)c(\theta) & s(\psi)s(\theta)s(\phi) + c(\phi)c\psi & c(\phi)s(\psi)s(\theta) - c(\psi)s(\phi) \\ -s(\theta) & c(\theta)s(\phi) & c(\phi)c(\theta) \end{bmatrix} \begin{bmatrix} u \\ v \\ w \end{bmatrix} \quad (6)$$

in which $c(x) = cos(x)$ and $s(x) = sin(x)$. Thus, the first three equations of motion can be obtained from (6).

The second step of the modeling is to examine the rotational kinematics of the vehicle. Let the angular velocities vector of the vehicle is $\nu = [p, q, r]^T$. Using Euler's rotation theorem [9] and the rotation matrices given in (2), ν can be expressed as it follows,

$$\begin{bmatrix} p \\ q \\ r \end{bmatrix} = \begin{bmatrix} \dot{\phi} \\ 0 \\ 0 \end{bmatrix} + R(\phi) \begin{bmatrix} 0 \\ \dot{\theta} \\ 0 \end{bmatrix} + R(\psi) \begin{bmatrix} 0 \\ 0 \\ \dot{\psi} \end{bmatrix} = T_B^N \begin{bmatrix} \dot{\phi} \\ \dot{\theta} \\ \dot{\psi} \end{bmatrix} \quad (7)$$

where,

$$T_B^N = \begin{bmatrix} 1 & 0 & -sin(\theta) \\ 0 & cos(\phi) & sin(\phi)cos(\theta) \\ 0 & -sin(\phi) & cos(\phi)cos(\theta) \end{bmatrix} \quad (8)$$

T_B^N is the transformation matrix for the angular velocities. Then using (7) and (8), the time derivative of orientation vector Θ can be expressed as it follows,

$$\begin{bmatrix} \dot{\phi} \\ \dot{\theta} \\ \dot{\psi} \end{bmatrix} = \left[T_B^N\right]^{-1} \begin{bmatrix} p \\ q \\ r \end{bmatrix} = \begin{bmatrix} 1 & sin(\phi)tan(\theta) & cos(\phi)tan(\theta) \\ 0 & cos(\phi) & -sin(\phi) \\ 0 & sin(\phi)sec(\theta) & cos(\phi)sec(\theta) \end{bmatrix} \begin{bmatrix} p \\ q \\ r \end{bmatrix} \quad (9)$$

Thus, the second set of three kinematic equations of motion can be obtained from (9).

Dynamics of Quadrotor
In order to obtain the first set of three dynamic equations of motion, Newton's second law can be applied in the inertial reference frame.

$$m\frac{dV}{dt_i} = F_B \quad (10)$$

where m is the total mass of the vehicle, $F_B = [F_x, F_y, F_Z]^T$ is the total external forces applied to the vehicle, and $\frac{d}{dt_i}$ is the time derivative taken in the inertial reference frame $\{N\}$. Time

derivative of the translational velocity vector V then can be expressed in terms of the time derivative of the velocity vector in the body reference frame and the angular velocity vector ν.

$$\frac{dV}{dt_i} = \frac{dV}{dt_b} + \nu \times V \tag{11}$$

where $\frac{dV}{dt_b} = [\dot{u}, \dot{v}, \dot{w}]^T$. Then, (10) can be re-written as it follows,

$$m\left[\frac{dV}{dt_b} + \nu \times V\right] = F_B \tag{12}$$

using (12), the time derivative of the translational velocities in the body reference frame can be expressed as it follows,

$$\begin{bmatrix} \dot{u} \\ \dot{v} \\ \dot{w} \end{bmatrix} = -\begin{bmatrix} p \\ q \\ r \end{bmatrix} \times \begin{bmatrix} u \\ v \\ w \end{bmatrix} + \frac{1}{m}\begin{bmatrix} F_x \\ F_y \\ F_z \end{bmatrix} = \begin{bmatrix} rv - qv \\ pw - ru \\ qu - pv \end{bmatrix} + \frac{1}{m}\begin{bmatrix} F_x \\ F_y \\ F_z \end{bmatrix} \tag{13}$$

The first set of three dynamic equations of motion can be obtained from (13). In order to obtain the last set of three dynamic equations of motion, Newton's second law can be stated in the inertial reference frame as it follows,

$$\frac{dL}{dt_i} = M \tag{14}$$

where L is the angular momentum in the body reference frame $\{B\}$ and $M = [M_x, M_y, M_z]^T$ is the sum of all externally applied moment acting about the center of the mass of the vehicle and expressed in the body reference frame. Eq.(14) can be rewritten as it follows,

$$\frac{dL}{dt_i} = \frac{dL}{dt_b} + \nu \times L = M \tag{15}$$

Angular momentum of a rigid body can be defined as the product of angular velocity vector and the inertia matrix.

$$L = I\nu \tag{16}$$

Referring to Assumption 1, inertia matrix of the vehicle can be expressed as it follows,

$$I = \begin{bmatrix} I_x & 0 & -I_{xz} \\ 0 & I_y & 0 \\ -I_{xz} & 0 & I_z \end{bmatrix} \tag{17}$$

Diagonal elements of I are the moment of inertia about respective axis and the off-diagonal terms are the products of inertia. Considering I is not changing in time (15) becomes,

$$\frac{dL}{dt_i} = I\frac{d\nu}{dt_b} + \nu \times (I\nu) = M \tag{18}$$

$\frac{d\nu}{dt_b}$ is the time derivative of the angular velocities in $\{B\}$. It can be expressed using (18) as it follows,

$$\dot{\nu} = \begin{bmatrix} \dot{p} \\ \dot{q} \\ \dot{r} \end{bmatrix} = I^{-1}\left[-\nu \times (I\nu)\right] = M \tag{19}$$

inverse of the inertia matrix can be calculated as it follows,

$$I^{-1} = \begin{bmatrix} I_z/\Gamma & 0 & I_{xz}/\Gamma \\ 0 & 1/I_y & 0 \\ I_{xz}/\Gamma & 0 & I_x/\Gamma \end{bmatrix} \tag{20}$$

where $\Gamma = I_x I_z - I_{xz}^2$. Using Eqs.(19) and (20), the last set of three dynamic equations of motion can be obtained as it follows,

$$\begin{bmatrix} \dot{p} \\ \dot{q} \\ \dot{r} \end{bmatrix} = \begin{bmatrix} (qr\,(I_y - I_z) + M_x)\,/I_x \\ (pr\,(I_z - I_x) + M_y)\,/I_y \\ (pq\,(I_x - I_y) + M_z)\,/I_z \end{bmatrix} \tag{21}$$

Equations of Motions and the States of Quadcopter
In Fig. 2, the vehicle with body reference frame $\{B\}$ is shown. In Table 1 all the states of the vehicle are given.

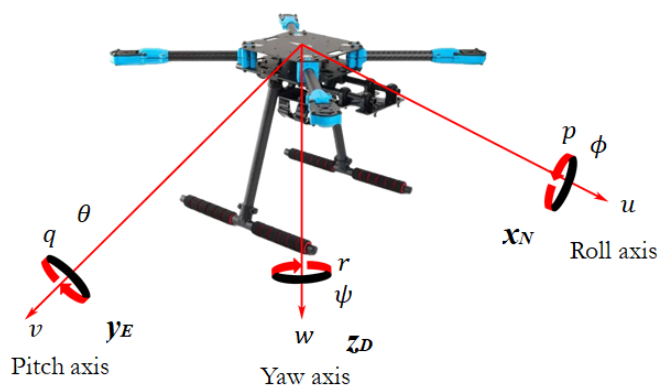

Figure 2: Quadrotor, its states and body reference frame $\{B\}$.

The equations of motion of the vehicle that constructs the mathematical model are given in Eqs.

Table 1: States of the quadcopter

No	State	Explanation
1	x_N	Inertial North position expressed in $\{N\}$
2	y_E	Inertial East position expressed in $\{N\}$
3	z_D	Inertial Down position expressed in $\{N\}$
4	u	Ground velocity along x axis expressed in $\{B\}$
5	v	Ground velocity along y axis expressed in $\{B\}$
6	w	Ground velocity along z axis expressed in $\{B\}$
7	ϕ	Roll angle
8	θ	Pitch angle
9	ψ	Yaw (heading) angle
10	p	Roll rate expressed in $\{B\}$
11	q	Pitch rate expressed in $\{B\}$
12	r	Yaw rate expressed in $\{B\}$

(22) through (25).

$$\dot{\eta} = \begin{bmatrix} \dot{x}_N \\ \dot{y}_E \\ \dot{z}_D \end{bmatrix} = \begin{bmatrix} c(\psi)c(\theta) & c(\psi)s(\phi)s(\theta) - c(\phi)s(\psi) & c(\phi)c(\psi)s(\theta) + s(\phi)s(\psi) \\ s(\psi)c(\theta) & s(\psi)s(\theta)s(\phi) + c(\phi)c\psi & c(\phi)s(\psi)s(\theta) - c(\psi)s(\phi) \\ -s(\theta) & c(\theta)s(\phi) & c(\phi)c(\theta) \end{bmatrix} \begin{bmatrix} u \\ v \\ w \end{bmatrix} \tag{22}$$

$$\dot{V} = \begin{bmatrix} \dot{u} \\ \dot{v} \\ \dot{w} \end{bmatrix} = \begin{bmatrix} rv - qv \\ pw - ru \\ qu - pv \end{bmatrix} + \frac{1}{m} \begin{bmatrix} F_x \\ F_y \\ F_z \end{bmatrix} \tag{23}$$

$$\dot{\Theta} = \begin{bmatrix} \dot{\phi} \\ \dot{\theta} \\ \dot{\psi} \end{bmatrix} = \begin{bmatrix} 1 & sin(\phi)tan(\theta) & cos(\phi)tan(\theta) \\ 0 & cos(\phi) & -sin(\phi) \\ 0 & sin(\phi)sec(\theta) & cos(\phi)sec(\theta) \end{bmatrix} \begin{bmatrix} p \\ q \\ r \end{bmatrix} \tag{24}$$

$$\dot{\nu} = \begin{bmatrix} \dot{p} \\ \dot{q} \\ \dot{r} \end{bmatrix} = \begin{bmatrix} (qr\,(I_y - I_z) + M_x)\,/I_x \\ (pr\,(I_z - I_x) + M_y)\,/I_y \\ (pq\,(I_x - I_y) + M_z)\,/I_z \end{bmatrix} \tag{25}$$

Forces and Moments Acting on the Vehicle

In this section, external forces and moments acting on the vehicle are described. Based on the Assumption 3, the only sources of the external forces and moments are the gravity and the propulsion such that,

$$F = f_g + f_T \tag{26}$$

$$M = M_P \tag{27}$$

where f_g is the gravitational forces, f_T is the total propulsion force acting on the vehicle, and M_P total moment about the vehicle axes due to propulsion forces [10].

Gravitational Forces
Gravity force is applied at the center of the mass of the vehicle and does not generate any moment. This forces is expressed in the $\{N\}$ inertial reference frame such that,

$$f_g^N = \begin{bmatrix} f_{g_x} \\ f_{g_y} \\ f_{g_z} \end{bmatrix} = \begin{bmatrix} 0 \\ 0 \\ mg \end{bmatrix} \tag{28}$$

where f_g^N shows that f_g is defined in $\{N\}$. In order to apply Newton's second law, (28) is expressed in body reference frame $\{B\}$ such that,

$$f_g^B = R_N^B f_g^N = \begin{bmatrix} -mgsin(\theta) \\ mgcos(\theta)sin(\phi) \\ mgcos(\theta)cos(\phi) \end{bmatrix} \tag{29}$$

Propulsion Forces
Four brushless DC motors are used in the propulsion system of the vehicle to generate thrust forces and torques needed to control the vehicle. In Fig. 3, the forces and moments generated by the propulsion system are shown. Thrust force generated by one motor can be expressed as it

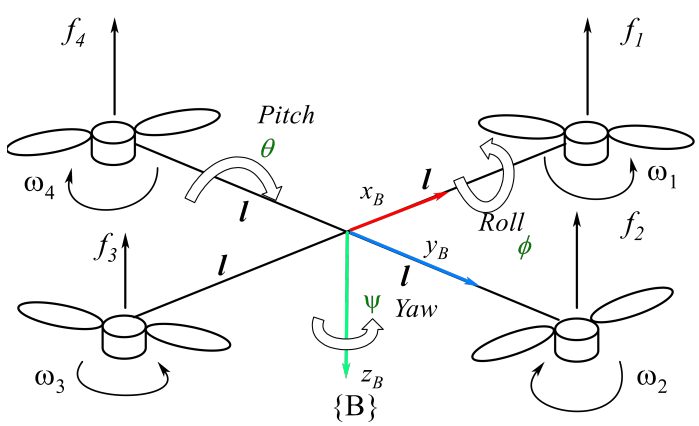

Figure 3: Forces and moments generated by the propulsion system.

follows,

$$f_i = \left[\frac{K_v K_\tau \sqrt{2\rho A}}{K_t}\right]^2 \omega_i^2 = k\omega_i^2 \tag{30}$$

where $i \in \{1, 4\}$, K_v is back emf coefficient, K_τ is the torque proportionality constant, K_t is the thrust coefficient, ρ is the air density, A is the area of operation of the propellers of the motor, and ω is the motor angular velocity. Considering all the motors of the vehicle are identical, the total propulsion forces acting on the vehicle can be expressed as it follows,

$$F_T = k \begin{bmatrix} 0 & 0 & \sum_1^4 \omega_i^2 \end{bmatrix}^T \tag{31}$$

Moment Generated by the Propulsion System
Due to the thrust force, each motor generates a moment about all three axes. Total moment about vehicle axes can be given such that,

$$\tau_\psi = b\left(\omega_1^2 - \omega_2^2 + \omega_3^2 - \omega_4^2\right) \tag{32}$$

$$\tau_\phi = \sum r \times f = l\left(k\omega_1^2 - k\omega_3^2\right) = lk\left(\omega_1^2 - \omega_3^2\right) \tag{33}$$

$$\tau_\theta = \sum r \times f = l\left(k\omega_2^2 - k\omega_4^2\right) = lk\left(\omega_2^2 - \omega_4^2\right) \tag{34}$$

where, τ_ψ, τ_ϕ, and τ_θ are moment about yaw, roll, and pitch axes accordingly. L is the distance between the center of each motor and center of the mass of the vehicle. b is the motor drag torque proportionality constant. The total moment acting on the vehicle can be summarized as it follows,

$$M = M_P = \begin{bmatrix} \tau_\phi \\ \tau_\theta \\ \tau_\psi \end{bmatrix} = \begin{bmatrix} lk\left(\omega_2^2 - \omega_4^2\right) \\ lk\left(\omega_1^2 - \omega_3^2\right) \\ b\left(\omega_1^2 - \omega_2^2 + \omega_3^2 - \omega_4^2\right) \end{bmatrix} \tag{35}$$

Control Design
The motion control problem of the quadrotors is well studied and various control strategies have been developed by the researchers over the last decade. Model based controllers may use both nonlinear and linear equations of motion of the vehicle. In this section, a linearized version of the obtained equations of motion are used as control model. A stabilizing position and velocity controllers have been designed for the vehicle. Control law calculation diagram is shown in Fig. 4. For each control subsystem a PID controller designed. Control law calculation for PID

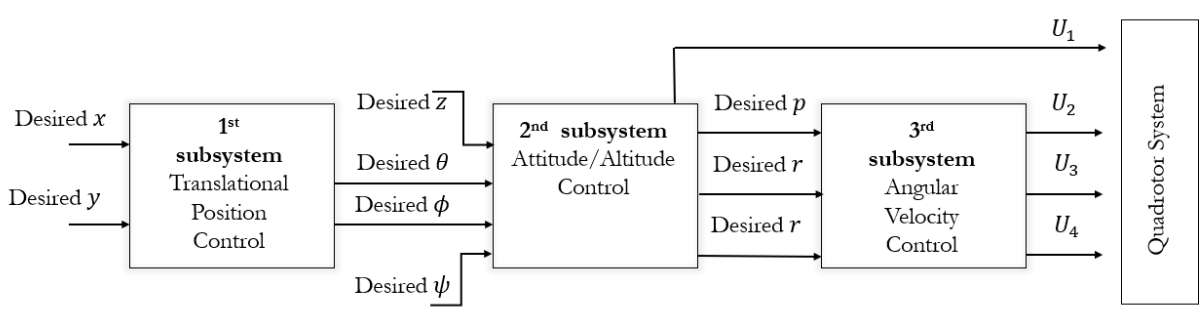

Figure 4: Control law calculation.

controllers is shown in Fig. 5.

Model Linearization
Referring to Assumption 6, small angle approximation can be used for the linearization of the equations of motion such that $cos(.) = 1$ and $sin(.) = 0$. Then equations of motion can be found as it follows,

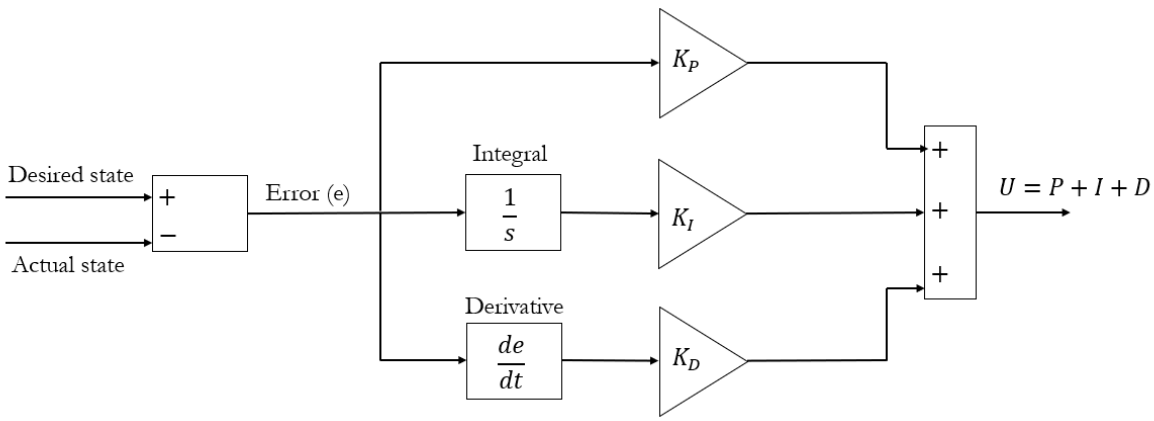

Figure 5: PID controller block diagram.

$$\dot{\eta} = \begin{bmatrix}\dot{x}_N & \dot{y}_E & \dot{z}_D\end{bmatrix}^T = \begin{bmatrix}u & v & w\end{bmatrix}^T \tag{36}$$

$$\dot{V} = \begin{bmatrix}\dot{u} & \dot{v} & \dot{w}\end{bmatrix}^T = \begin{bmatrix}-g\theta & g\phi & F_T/m\end{bmatrix}^T \tag{37}$$

$$\dot{\Theta} = \begin{bmatrix}\dot{\phi} & \dot{\theta} & \dot{\psi}\end{bmatrix}^T = \begin{bmatrix}p & q & r\end{bmatrix}^T \tag{38}$$

$$\dot{\nu} = \begin{bmatrix}\dot{p} & \dot{q} & \dot{r}\end{bmatrix}^T = \begin{bmatrix}\tau_\phi/I_X & \tau_\theta/I_y & \tau_\psi\end{bmatrix}^T \tag{39}$$

Thrust forces and the consequent moments about respective axes are the only inputs to the system. Thus, the input vector for the vehicle can be defined using Eqs.(31) through (35) such that,

$$U = \begin{bmatrix}U_1\\U_2\\U_3\\U_4\end{bmatrix} = \begin{bmatrix}F_T\\\tau_\phi\\\tau_\theta\\\tau_\psi\end{bmatrix} = \begin{bmatrix}k & k & k & k\\0 & lk & 0 & -lk\\lk & 0 & -lk & 0\\b & -b & b & -b\end{bmatrix}\begin{bmatrix}\omega_1^2\\\omega_2^2\\\omega_3^2\\\omega_4^2\end{bmatrix} \tag{40}$$

Position Controller

To prevent vehicle drift due to deviation around the desired attitude, a position controller is designed to keep the position at the reference position values. A PID controller is a suitable control strategy not only to keep the vehicle in the desired position but also to track the waypoints of a trajectory. Inputs for this controller are the desired x_{N_d} and y_{E_d} and the outputs are desired pitch ϕ_d and roll θ_d angels. PID control law is given as it follows,

$$\phi_d = k_{P_x}\left[x_{N_d} - x_N\right] + k_{I_x}\int_0^t \left[x_{N_d} - x_N\right] dt + k_{D_x}\left[\dot{x}_{N_d} - \dot{x}_N\right] \tag{41}$$

$$\theta_d = k_{P_y}\left[y_{E_d} - y_E\right] + k_{I_y}\int_0^t \left[y_{E_d} - y_E\right] dt + k_{D_y}\left[\dot{y}_{E_d} - \dot{y}_E\right] \tag{42}$$

where k_P, k_I, and k_I are proportional, integral and derivative gains, respectively.

Altitude and Orientation Controller
Based on Assumption 7, vehicle's horizontal and vertical motions can be decoupled and controlled separately. Total thrust force of the vehicle determines the vehicle altitude such that,

$$U_1 = F_T = \frac{1}{cos(\phi)cos(\theta)} \left[k_{P_z} e_z + k_{I_z} \int_0^t e_z dt + k_{D_z} \dot{e}_z \right] \tag{43}$$

where e_z is the difference between desired and actual altitude. Orientation of the vehicle then can be controlled by determining the desired angular velocities of the vehicle such that,

$$p_d = k_{P_p} e_\phi + k_{I_p} \int_0^t e_\phi dt + k_{D_p} \dot{e}_\phi \tag{44}$$

$$q_d = k_{P_q} e_\theta + k_{I_q} \int_0^t e_\theta dt + k_{D_q} \dot{e}_\theta \tag{45}$$

$$r_d = k_{P_r} e_\psi + k_{I_r} \int_0^t e_\psi dt + k_{D_r} \dot{e}_\psi \tag{46}$$

Rotational Velocity Controller
Desired angular velocities determined by the orientation controller are fed into the rotational velocity controller in order to generate desired torques to achieve the desired orientation of the vehicle. Control law for the rotational velocity controller can be given as,

$$U_2 = k_{P_p} e_p + k_{I_p} \int_0^t e_p dt + k_{D_p} \dot{e}_p \tag{47}$$

$$U_3 = k_{P_q} e_q + k_{I_q} \int_0^t e_q dt + k_{D_q} \dot{e}_q \tag{48}$$

$$U_4 = k_{P_r} e_r + k_{I_r} \int_0^t e_r dt + k_{D_r} \dot{e}_r \tag{49}$$

where, e_p, e_q, and e_r are the roll, pitch, and yaw rate errors respectively.

Simulation Results
Obtained mathematical model of the vehicle and the proposed control algorithms are tested using a numerical simulation software. The vehicle parameters are shown in Table. 2. Control parameters are tuned experimentally by using Ziegler-Nichols method. The following steps are applied while determining the control gains.

1. All the gains are initially set to zero.
2. k_P value is slowly increased until the process starts to oscillate. The ultimate value of k_P and oscillation frequency are used to determine the other control gains.
3. k_P is set to 60 $\%$ of ultimate value.

Table 2: Parameters of Quadrotor

No	Parameter	Value
1	m	$0.72kg$
2	l	$0.42m$
3	I_x	$0.048kg.m^2$
4	I_y	$0.048kg.m^2$
5	I_z	$0.32kg.m^2$
6	K_τ	$1.4725 \times 10^{-6}kg.m^2$
7	K_t	$1.35 \times 10^{-5}kg.m$
8	g	$9.81m/s^2$
9	ρ	$1.293kg/m^3$
10	A	$3.1416m^2$

4. k_D is slowly increased until derivative time reaches to $1/8$ of ultimate period to obtain a 1 period oscillation.
5. k_I is increased until integral time reaches to $1/2$ of ultimate period to obtain a minimum steady-state error.

Simulations are realized for a hovering motion. In Tab. 3, gain values of the controllers are shown.

Table 3: Control Gains

State	x_N	y_E	z_D	ϕ	θ	ψ	p	q	r
k_P	0.47	0.45	7.5	5.5	6.0	15.0	3.2	3.0	4.2
k_I	0.35	0.30	14	0.1	0.05	0.05	1.0	0.9	1
k_D	-0.40	-0.45	-7.5	0.01	0.01	0.05	-0.5	-0.5	-0.1

Vehicle's initial position and orientation vector are chosen as $[x_N, y_E, z_D, \phi, \theta, \psi] = [0, 0, 0, -0.5, -0.5, -\pi/3]$. The desired reference values for the states has been chosen as $[x_N, y_E, z_D, \phi, \theta, \psi] = [6, 4, 5, -0.1, 0, -\pi]$. Results are shown in the following figures. In Fig. 6 position control results are shown. Designed controller achieved to reach and hold the vehicle at the desired x_N and y_E positions with 17% and 8% overshoot values, respectively. In Fig. 7 altitude control result for z_D position is shown. Controller was able to reach and hold the vehicle at the reference with a 16% overshoot. In Fig. 8 and Fig. 9 attitude control for roll and pitch dynamics and heading control are shown, respectively. Although controller was able to reach the desired values a remarkable overshoot for both roll and pitch experienced.

Conclusion

The aim of this study is to develop a systematic method to obtain a mathematical model for quadrotor type UAVs and to design motion controllers following the same systematic. This systematic approach includes examining the system's motion under two titles: translational motion and angular motion. Then, each motion is analyzed in terms of kinematics and dynamics. Finally, for each analysis a motion controller has been designed. As the autonomous vehicle technology and intelligent system designs have been on a rise for the last decade, quadrotor

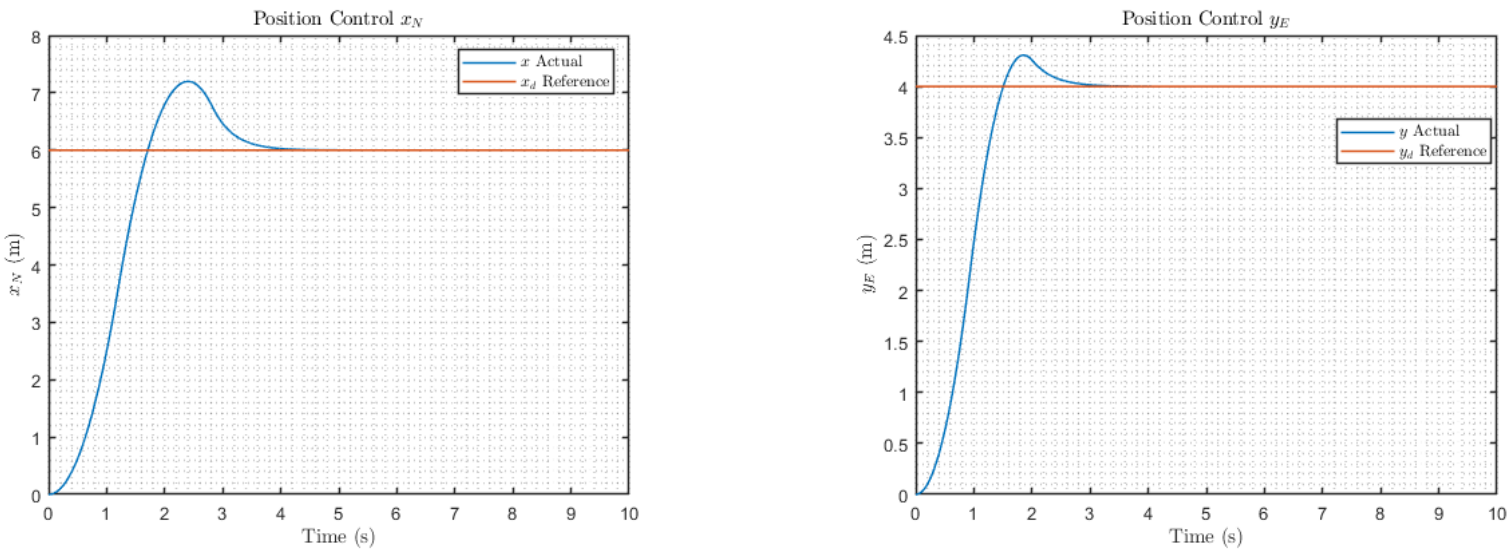

(a) (b)

Figure 6: (a) Position control for x_N. (b) Position control for y_E.

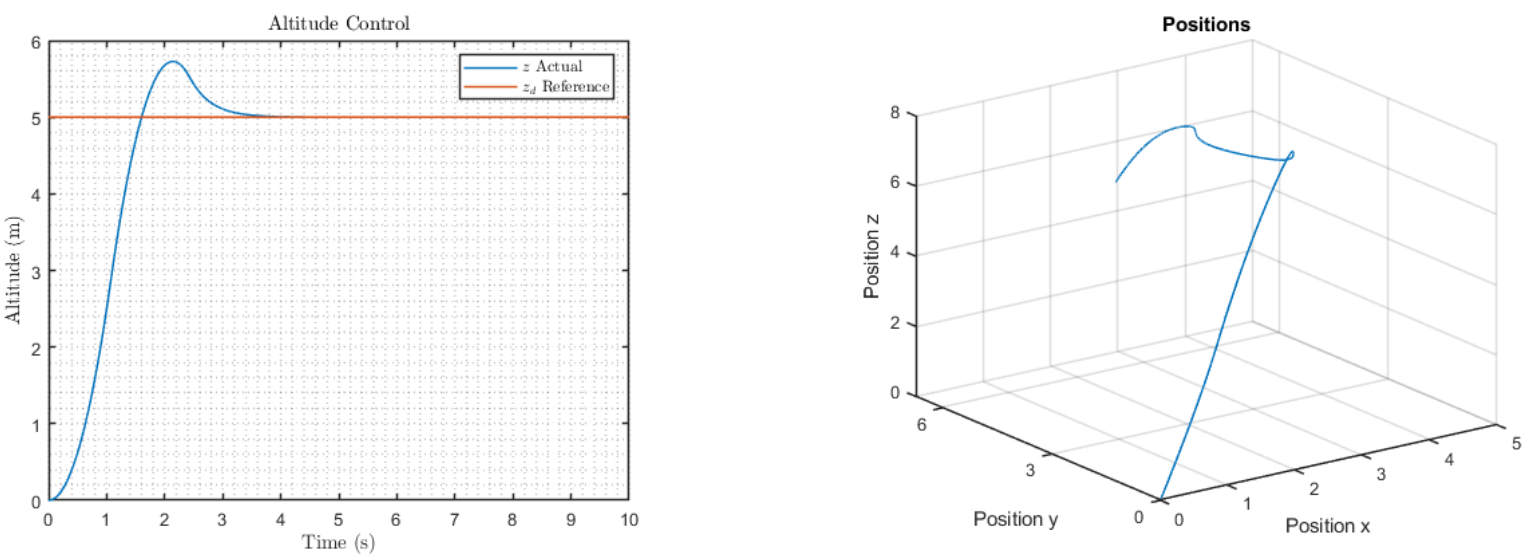

(a) (b)

Figure 7: (a) Altitude control z. (b) Position control for x_N, y_E, y_D.

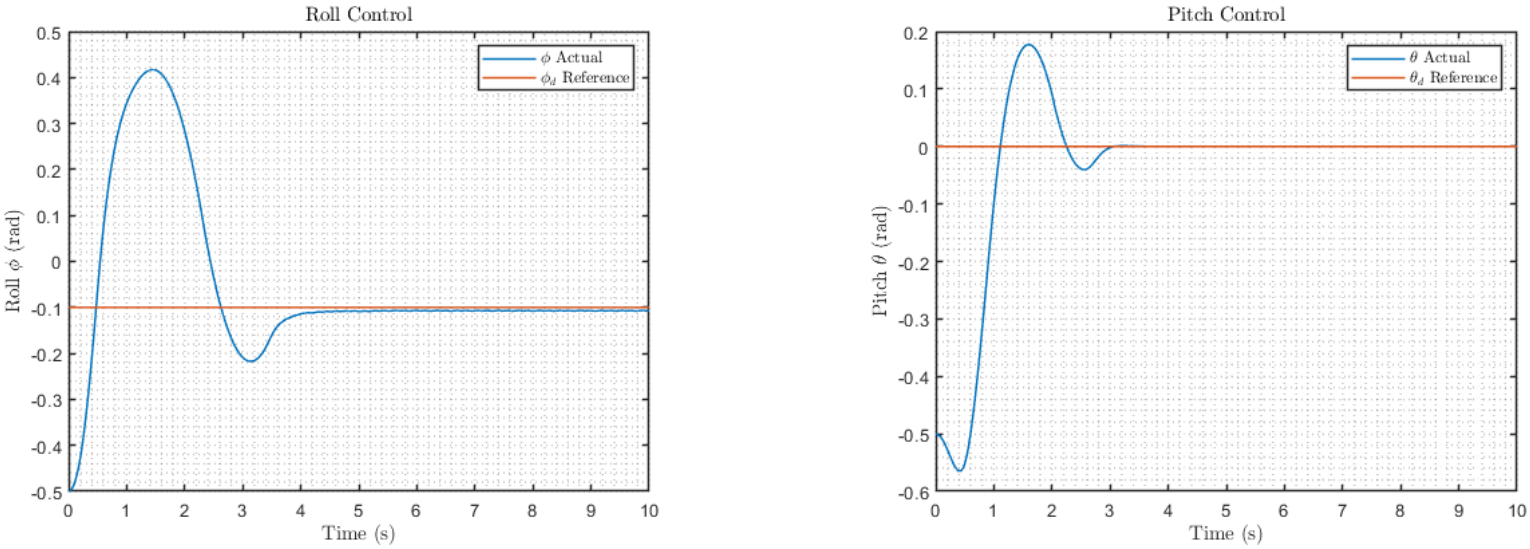

(a) (b)

Figure 8: (a) Orientation control for ϕ. (b) Orientation control for θ.

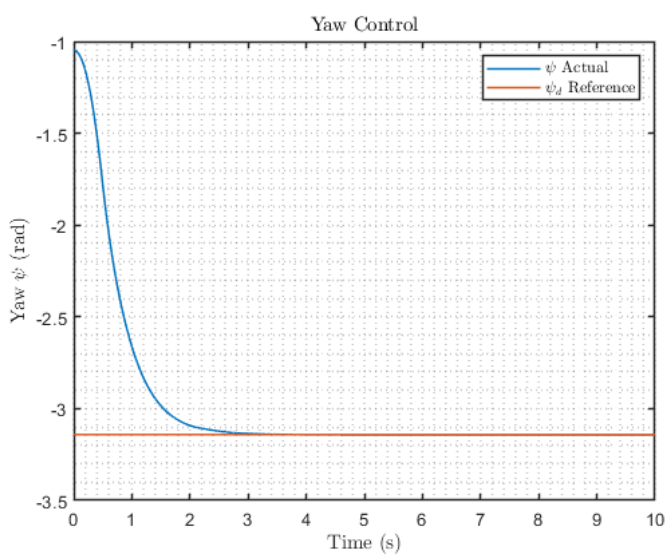

Figure 9: Heading ψ control.

mathematical modeling and control design are good learning practices for the students. Developed teaching methodology has a potential to make the understanding of complex mathematical models faster for undergraduate students.

References

[1] A. K. Sony, B. Bhushan and R. Astya, ”Revolutionizing Transportation System Using Artificial Intelligence Technique,” 2023 International Conference on Computing, Communication, and Intelligent Systems (ICCCIS), Greater Noida, India, 2023, pp. 1171-1176, doi: 10.1109/ICCCIS60361.2023.10425111.

[2] K. Holeyannavar, A. C. Giriyapur and R. P. Tapaskar, ”Artificial Intelligence Based Intelligent Social Humanoid Robot – Ajit 2.0,” 2019 International Conference on Intelligent Computing and Control Systems (ICCS), Madurai, India, 2019, pp. 875-878, doi: 10.1109/ICCS45141.2019.9065883.

[3] G. Singh, V. K. Banga and T. Yingthawornsuk, ”Artificial Intelligence and Industrial Robot,” 2022 16th International Conference on Signal-Image Technology & Internet-Based Systems (SITIS), Dijon, France, 2022, pp. 622-625, doi: 10.1109/SITIS57111.2022.00098.

[4] K. Paranjape, M. Schinkel and P. Nanayakkara, ”Short Keynote Paper: Mainstreaming Personalized Healthcare–Transforming Healthcare Through New Era of Artificial Intelligence,” in IEEE Journal of Biomedical and Health Informatics, vol. 24, no. 7, pp. 1860-1863, July 2020, doi: 10.1109/JBHI.2020.2970807.

[5] T. Soni, D. Gupta, M. Uppal and S. Juneja, ”Explicability of Artificial Intelligence in Healthcare 5.0,” 2023 International Conference on Artificial Intelligence and Smart Communication (AISC), Greater Noida, India, 2023, pp. 1256-1261, doi: 10.1109/AISC56616.2023.10085222.

[6] Aref, E., & Fredericks, T. K. (2021, July), A New Course Development in Usability Engineering: Hands-On Learning Based on Research Work Paper presented at 2021 ASEE Virtual Annual Conference Content Access, Virtual Conference. 10.18260/1-2–36599

[7] Perna, Laura W., editor. Preparing Today’s Students for Tomorrow’s Jobs in Metropolitan America. University of Pennsylvania Press, 2013. JSTOR, http://www.jstor.org/stable/j.ctt3fhqnp. Accessed 10 July 2024.

[8] Fossen, T. I. (2011). Handbook of Marine Craft Hydrodynamics and Motion Control (1. Aufl.). Wiley.

[9] Fossen, T. (1995). Guidance and Control of Ocean Vehicles. New York, NY: Wiley.

[10] Randal W. Beard and Timothy W. McLain. 2012. Small Unmanned Aircraft: Theory and Practice. Princeton University Press, USA.